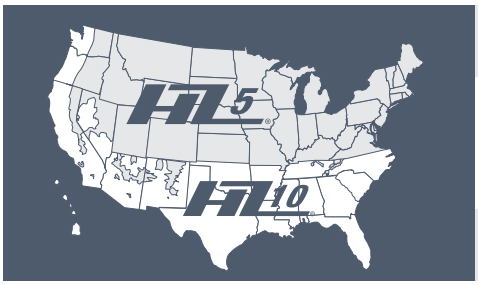

V. ANDREW TAN
LICENSE
No. 81662
STATE OF
FLORIDA
PROFESSIONAL ENGINEER
8/18/23

Hardie® Artisan Lap Siding

EFFECTIVE April 2023

IMPORTANT: FAILURE TO FOLLOW INSTALLATION INSTRUCTIONS PUBLISHED BY JAMES HARDIE AND COMPLY WITH APPLICABLE BUILDING CODES MAY VIOLATE LOCAL LAWS, AFFECT BUILDING ENVELOPE PERFORMANCE AND MAY AFFECT WARRANTY COVERAGE. FAILURE TO COMPLY WITH ALL HEALTH AND SAFETY REGULATIONS WHEN CUTTING AND INSTALLING THIS PRODUCT MAY RESULT IN PERSONAL INJURY. BEFORE INSTALLATION, CONFIRM YOU ARE USING THE CORRECT HARDIE® ZONE PRODUCT INSTRUCTIONS BY VISITING HARDIEZONE.COM OR CALL 1-866-942-7343 (866-9-HARDIE)

CONTENTS

1	**INTRODUCTION**	1
2	**SAFE WORKING PRACTICES**	2
	Storage	2
	Handling	2
	Cutting	2
3	**GENERAL REQUIREMENTS**	3
	Cut Edge Treatment	3
	Clearance & Flashing requirements	3
4	**FASTENING**	4
	General Fastening Requirements	4
	Pneumatic Fastening	4
	Trim Nailing	4
5	**OVERVIEW**	5
6	**TRIM INSTALLATION**	6
	Adding depth	6
	Corner details	6
	Corner Construction Details	7
	LAP SIDING INSTALLATION	8
	Joint placement	8
	Joint Treatment	8
	Starter Strip	8
	Fastener Requirements	8
7	**MITER CORNERS**	9
	Wall preparation	9
	Cutting preparation	10
	Saw setup	10
	Outside corners	11
	Inside corners	11
	Finishing	11
8	**FINISHING & MAINTENANCE**	12
	Caulking	12
	Painting	12
	Cut Edge Treatment	12
	Care & Maintenance	12
	High pressure washing	13
	Coverag	13

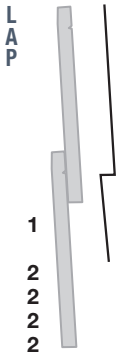

1. INTRODUCTION

The material contained herein provides installation guidelines for the Hardie® Artisan lap siding by James Hardie. This document is intended for use by builders, cladding installers, and other contractors who may be involved with the installation of the Hardie® Artisan lap siding.

Before you begin your siding project read the instruction manual completely and thoroughly. This document describes and illustrates the minimum steps required to install the Hardie® Artisan lap siding. No instruction manual can anticipate every condition, circumstance, or situation that might arise during installation over the course of the project. When in doubt about assembly details, contact the architect, specifier, or a building official. Contact your James Hardie Sales and Install Representative for product support 1-800-9HARDIE (1- 800-942-7343).

PREPARATION

Ensure the drainage plane is intact and all penetrations are sealed. Plan your work, use the proper tools, techniques, and follow installation procedures as covered in this installation manual. It is important that builders, specifiers, and installers recognize requirements and information pertaining to:

- Safety
- Storage and Handling
- Cutting
- Wall Preparation
- Fastening

For best results, before installation, ensure your panels are clean and free of dirt, dust, chalking, oil, grease, organic contaminants, or mold. Dust from cutting and construction should be removed immediately upon installation.

PRACTICE INSTALLING MATERIAL

Utilize a mock-up to evaluate installation and finishing techniques, with a focus on specific applications designed by a design professional or engineer. The fastening practice and/or fastening tools shall be properly adjusted to avoid overdriving. Do not proceed with remaining work until workmanship, color, and sheen are approved. Repeat mock-up area as required to produce acceptable work.

2. SAFE WORKING PRACTICES

STORAGE

Store flat and keep dry and covered prior to installation (Fig 2a). Installing siding wet or saturated may result in shrinkage at joints. Protect edges and corners from breakage. James Hardie is not responsible for damage caused by improper storage and handling of the product

Figure 2a

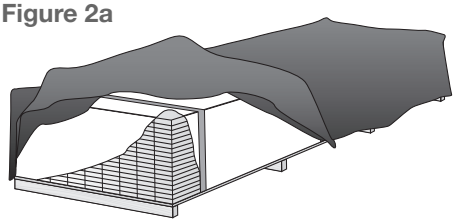

HANDLING

When working with Hardie® siding and trim products, carry the product on edge. If only one person is carrying the product, hold it in the middle and spread arms apart to better support the product (Fig 2b). If two people are carrying the product, hold it near each end and on edge (Fig 2c). Do not lift or carry Hardie® Artisan products flat (Fig 2d).

Figure 2b

Figure 2c

Figure 2d

CUTTING INSTRUCTIONS

1) Position cutting station so that wind will blow dust away from user and others in working area.
2) Use one of the following methods:
   - **A. Best:** Circular saw equipped with a Hardie™ Blade saw blade and attached vacuum dust collection system
   - **B. Better:** Circular saw equipped with a Hardie™ Blade saw blade and supplemental ventilation
   - **C. Good:** Circular saw equipped with a Hardie™ Blade saw blade

NEVER grind or cut with a power saw indoors.

NEVER dry sweep dust; use wet dust suppression or vacuum to collect dust.

For maximum dust reduction, James Hardie recommends using the "Best" cutting practices. **For best performance** when cutting with a circular saw, James Hardie recommends using Hardie™ Blade saw blades.

IMPORTANT: The Occupational Safety and Health Administration (OSHA) regulates workplace exposure to silica dust. For construction sites, OSHA has deemed that cutting fiber cement with a circular saw having a blade diameter less than 8 inches and connected to a commercially available dust collection system per manufacturer's instructions results in exposures below the OSHA Permissible Exposure Limit (PEL) for respirable crystalline silica, without the need for additional respiratory protection.

Note: If you are unsure about how to comply with OSHA silica dust regulations, consult a qualified industrial hygienist or safety professional, or contact your James Hardie technical sales representative for assistance. James Hardie makes no representation or warranty that adopting a particular cutting practice will assure your compliance with OSHA rules or other applicable laws and safety requirements.

CUT STATION & CUTTING

Setup cutting station (Fig. 2.e), and locate close to installation area.

Use a Hardie™ Blade to cut Hardie® products.

Figure 2e

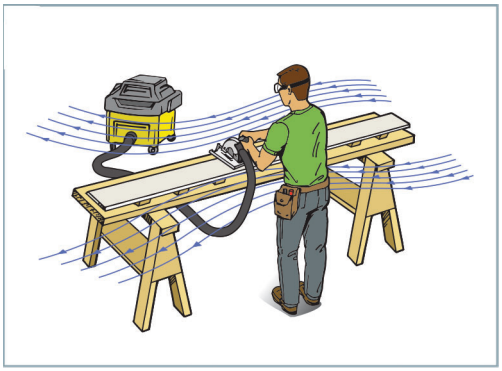

Figure 2f

7 - 1/4in Circular saw with vacuum dust collection system	Hardie™ Blade saw blade

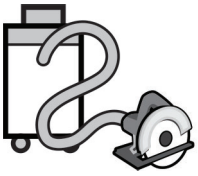

Poly-dimond blade for James Hardie fiber cement

3. GENERAL REQUIREMENTS

- Hardie® Artisan lap siding must be installed over minimum 7/16 in thick OSB sheathing and installed over braced wood, spaced a maximum of 24 in. o.c.. See General Fastening Requirements. Irregularities in framing and sheathing can mirror through the finished application. Correct irregularities before installing siding.
- Information on installing Hardie® products over foam can be located in JH Tech Bulletin 19 at jameshardiepros.com
- A water-resistive barrier is required in accordance with local building code requirements. The water-resistive barrier must be appropriately installed with penetration and junction flashing in accordance with local building code requirements. James Hardie will assume no responsibility for water infiltration. Hardie™ Weather Barrier, a non-woven non-perforated housewrap, does comply with building code requirements.
- All flashing and clearance requirements shall be followed when installing Hardie® products.
- Adjacent finished grade must slope away from the building in accordance with local building codes - typically a minimum of 6in. in the first 10ft.
- Do not use Hardie® Artisan siding in fascia or trim applications.
- Do not install Hardie® products such that they may remain in contact with standing water.
- Hardie® Artisan lap siding may be installed on flat vertical wall applications only.
- DO NOT use stain, oil/alkyd based paint, or powder coating on Hardie® products.
- For larger projects, including commercial and multi-family projects, where the span of the wall is significant in length, the designer and/or architect should take into consideration the coefficient of thermal expansion and moisture movement of the product in their design. These values can be found in the Technical Bulletin #8 “Expansion Characteristics of Hardie® Siding Products” at jameshardiepros.com.

CUT EDGE TREATMENT

Caulk, paint or prime all field cut edges.

CLEARANCE AND FLASHING REQUIREMENTS

Figure 3a
Roof to Wall

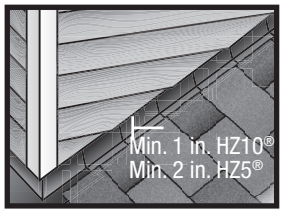

Figure 3b
Horizontal Flashing

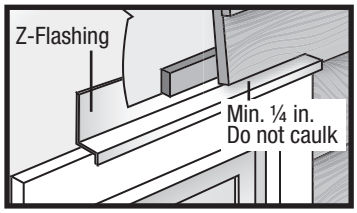

Figure 3c
Kickout Flashing

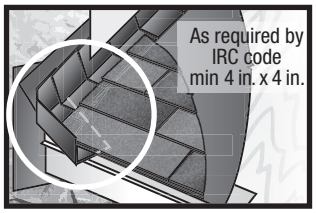

Figure 3d
Slabs, Path, Steps to Siding

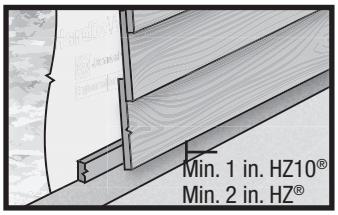

Figure 3e
Deck to Wall

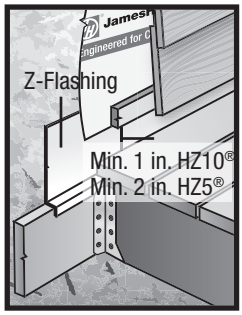

Figure 3f
Ground to Siding

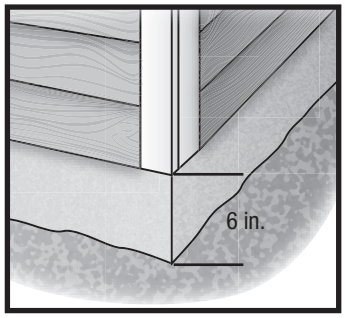

Figure 3g
Gutter to Siding

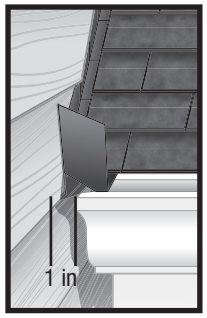

Figure 3h
Sheltered Areas

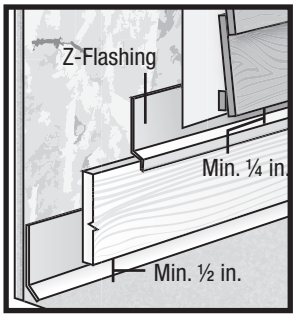

Figure 3i
Mortar/Masonry

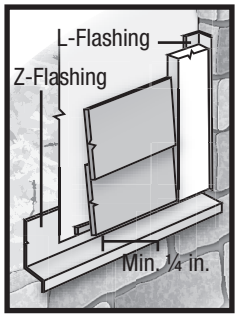

Figure 3j
Drip Edge

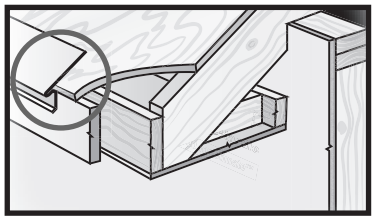

Figure 3k
Block Penetration
(Recommended for HZ10®)

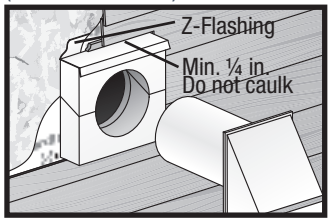

Figure 3L
Valley/Shingle Extension

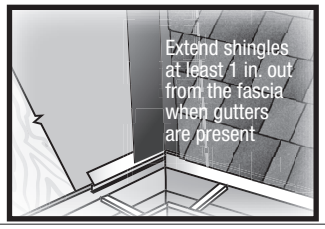

4. FASTENING

GENERAL FASTENING REQUIREMENTS

• Consult applicable product evaluation or listing for correct fasteners type and placement to achieve specified design wind loads.
• NOTE Published wind loads may not be applicable to all areas where Local Building Codes have specific jurisdiction. Consult James Hardie Technical Services if you are unsure of applicable compliance documentation.
• Drive fasteners perpendicular to siding and framing
• Fastener heads should fit snug against siding (no air space).
• Do not over-drive nail heads or drive nails at an angle.
• If nail is countersunk fill nail hole and add a nail.
• For wood framing, under driven nails should be hit flush to the plank with a hammer.
• NOTE Whenever a structural member is present, Hardie® Artisan lap should be fastened with even spacing to the structural member. The tables allowing direct to OSB or plywood should only be used when traditional framing is not available.
• Do not use aluminum fasteners, staples, or clipped head nails.

Fasteners must be corrosion resistant, galvanized, or stainless steel. Electro-galvanized are acceptable but may exhibit premature corrosion. James Hardie recommends the use of quality, hot-dipped galvanized nails. James Hardie is not responsible for the corrosion resistance of fasteners. Stainless steel fasteners are recommended when installing Hardie® products near the ocean, large bodies of water, or in very humid climates. Note: With the exception of finish nails, all stainless steel nails must be ring-shank (not smooth) nails.

Manufacturers of ACQ and CA preservative-treated wood recommend spacer materials or other physical barriers to prevent direct contact of ACQ or CA preservative-treated wood and aluminum products. Fasteners used to attach Hardie™ Trim Tabs to preservative-treated wood shall be of hot dipped zinc-coated galvanized steel or stainless steel and in accordance to 2021 IRC R317.3 or 2018 2304.10.5.

PNEUMATIC FASTENING

Hardie® products can be hand nailed or fastened with a pneumatic tool. Pneumatic fastening is highly recommended. Set air pressure so that the fastener is driven snug with the surface of the siding. A flush mount attachment on the pneumatic tool is recommended. This will help control the depth the nail is driven. If setting the nail depth proves difficult, choose a setting that under drives the nail. (Drive under driven nails snug with a smooth faced hammer - Does not apply for installation to steel framing).

NAILING REQUIREMENTS:

Hardie® Artisan Lap Siding
Consult applicable product evaluation or listing for correct fasteners type and placement to achieve specified design wind loads.
Place fasteners on nail line or (If nail line is not present, place fastener between 3/4 in. & 1 in. from top of plank). Do not nail within 1 in. of the end of the plank. Pin-backed corners may be done for aesthetic purposes only. Headed siding nails are recommended for pin-backs. Place pin-backs on nail line into sheathing, no closer than 1 in. from plank ends.

Hardie™ Architectural Trims
Use minimum 16 ga. finish nails to attach Hardie® trim boards to wood frame construction.

Fastening instructions are similar to all applications. When using finishing nails, position nails no closer than 1/2 in. from the edge of the trim and for all other fasteners no closer than 3/4 in. Fasteners must me no closer than 1 in. .from the ends to trim and spaced a maximum of 16 in. O.C. Ensure trim adequately fastened.

Fastener length guide for attaching trim:

Trim Thickness	Filler Thickness	Min Fastener Length
1 in. or 5/4 trim	1/2 in. filler	2 1/2 in.
3/4 in. or 4/4 trim	3/4 in. filler	2 1/2 in.

Pre-built Corner Trim

Use a 2 in. finish nail to fasten trim together. Longer finish nails may bend.

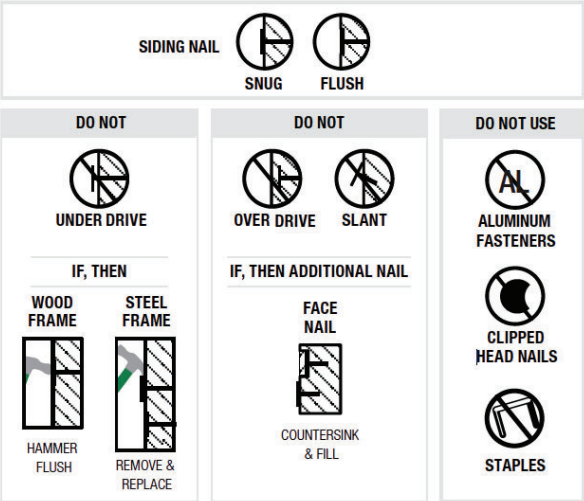

5. Overview

Installation Example

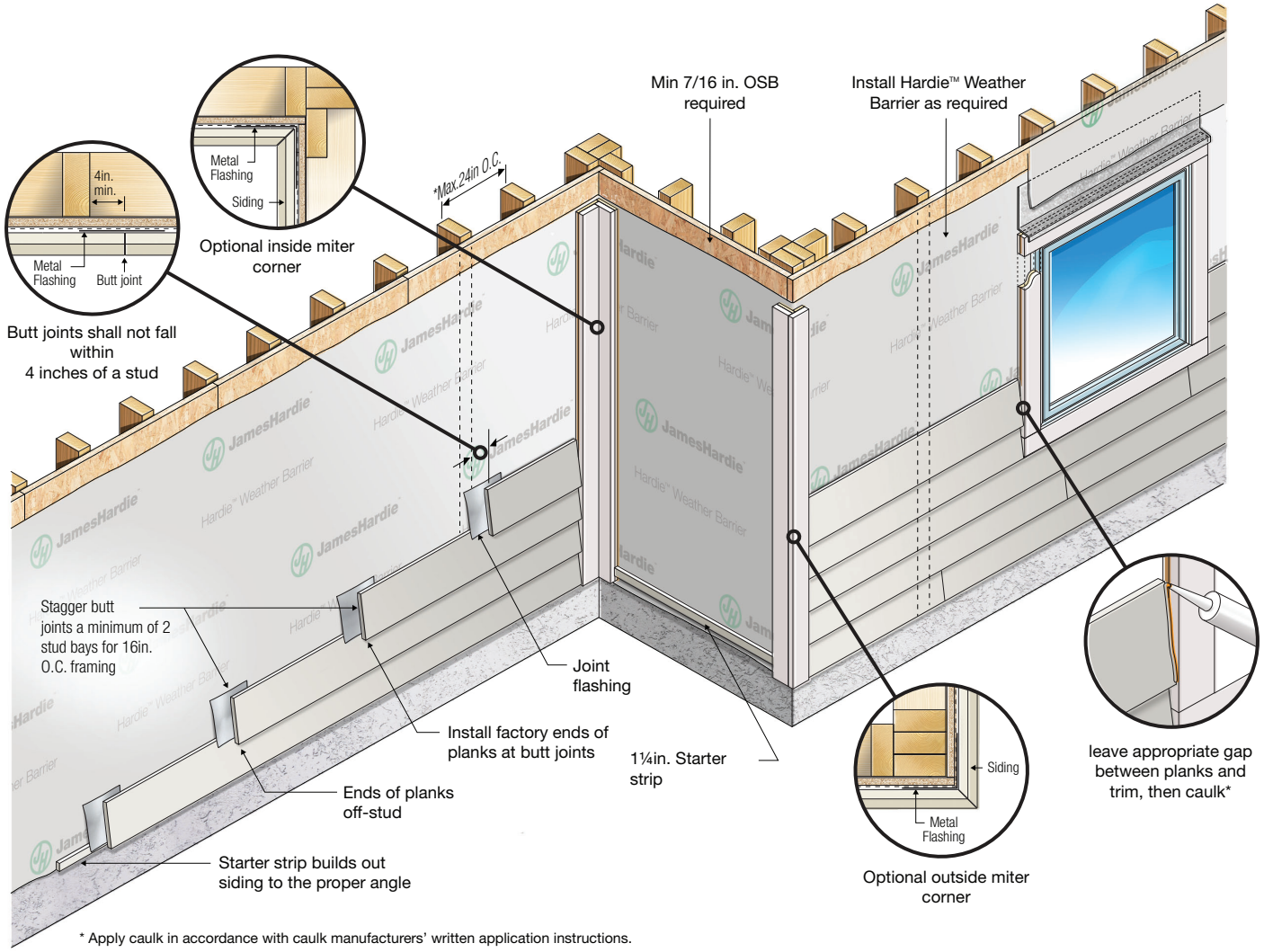

* Apply caulk in accordance with caulk manufacturers' written application instructions.

6. INSTALLATION (TRIM)

Hardie® Artisan lap siding requires a trim thickness of min. 1 1/2 in. for proper aesthetics.

(For guidance on miter corners, please see section 7)

Note

The guidance within is to be used in conjunction with current Hardie® trim installation instructions found at www. jameshardiepros.com

To add depth to Hardie® trim simply add a filler board under the trim. For example, to obtain an actual thickness of 1 1/2in. using 5/4 Hardie® trim, use 1/2 in. plywood, OSB or fiber cement.

Flashing is required over all horizonal and exposed trim.

Figure 6b

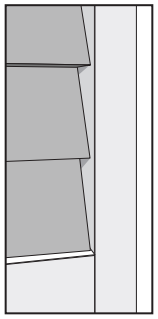

Min 1 1/2 in. thick trim

STEPS:

1. If desired, begin by installing 1/2 in. filler material at the location where the 5/4 Hardie® trim will be installed. Fasten lightly to hold in place.
2. Install Hardie® trim as shown in Figs. 6a thur 6e and as per installation instructions.
3. Cover any exposed filler materials with a J-flashing Fig. 6d
4. For alternative corners see Illustrations Fig. 6f thru 6m

Figure 6c

Doors

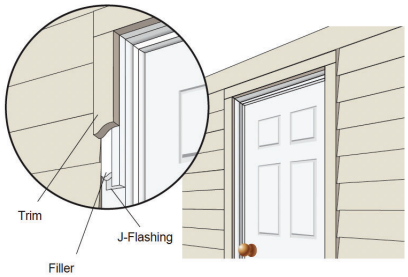

CORNERS

(For guidance on miter corners, please see section 7)

Figure 6a

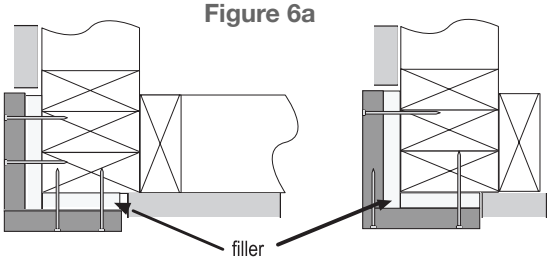

Figure 6d

Decks, Patios, Slabs

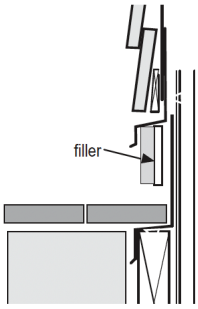

Figure 6e

Belly Bands

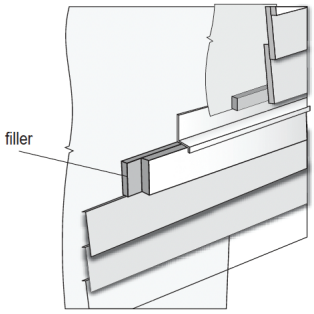

FASTENING

Use a 2 1/2 in. finish nail when installing Hardie® trim boards over filler material (not to exceed 1 ½ in. total thickness) to ensure proper penetration into nail-able substrate.

Fastening instructions are similar for each of these applications. Position nails no closer than 3/4 in. from the side edges of the trim board, and no closer than 1 in. from the ends. Space fasteners a maximum of 16 in. on center. Additional fasteners may be required to ensure that the trim is adequately secured.

INSTALLATION (TRIM- Continued)

CONSTRUCTION DETAILS:

Corners using 5/4 Hardie® trim & filler

Figure 6f

5/4 trim & 1/2 in. filler outside corner

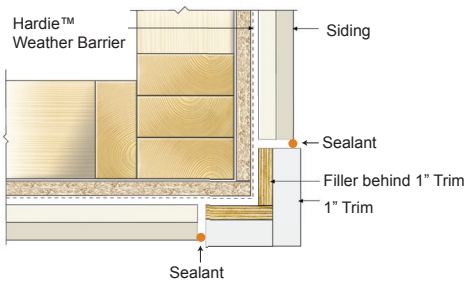

Figure 6g

5/4 trim & 1/2 in. filler inside corner

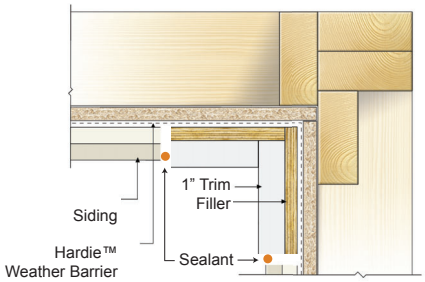

Alternative corner options*

Figure 6h

Double J outside corner

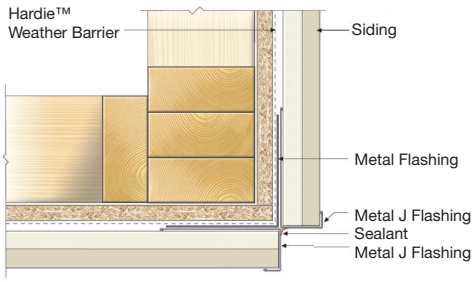

Figure 6i

Double J trim inside corner

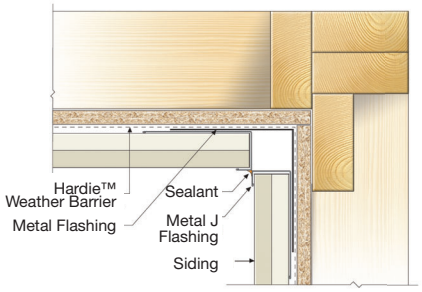

Figure 6j

Single J trim outside corner

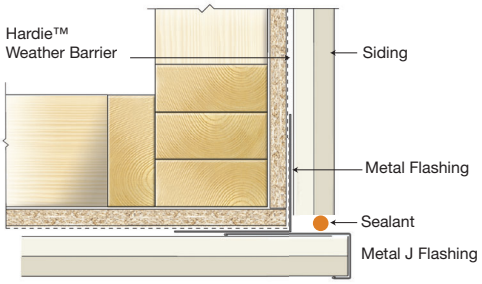

Figure 6k

Single J trim inside corner

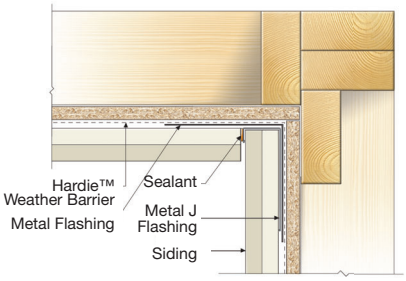

*Details are for illustrative purposes only. James Hardie makes no warranty or representation with respect to the information contained within.

INSTALLATION (LAP SIDING)

JOINT PLACEMENT

Hardie® Artisan lap siding butt joints are designed to be installed off stud. Butt joints shall not fall within 4 inches of a stud (fig. 6n). Do not nail within 1 in. of the end of planks.

STARTER STRIP

Install a 1-1/4 in. wide starter strip to ensure a consistent plank angle (fig 6p).

FASTENER REQUIREMENTS

Blind fastening only

Consult applicable product evaluation or listing for correct fastener type and placement to achieve specified design wind loads.

AESTHETIC BUTT JOINT PINNING

Pinning at butt joints may be done for aesthetic purposes only and not for structural support. Blind nail into sheathing at nail line and no closer than 1 in. to the edge of plank (fig.6o). If additional pinning is needed, a finish nail may be placed at the bottom of the plank. The finish nail should be nailed flush to the surface (not countersunk), and shall be fully corrosion resistant (e.g. galvanized or stainless)

JOINT TREATMENT

One or more of the following joint treatment options are required by code (as referenced 2021 IRC R703.10.2)

A. Joint Flashing (James Hardie recommended)
B. Caulking*
C. "H" jointer cover

Figure 6m

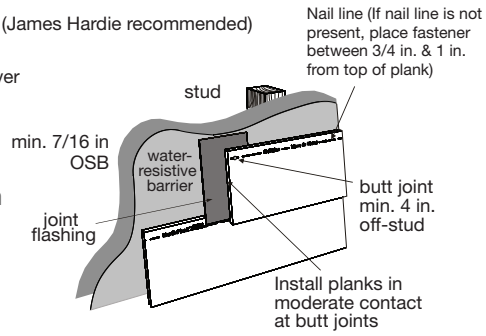

Figure 6L

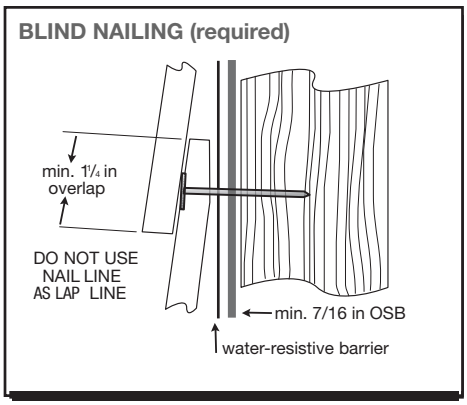

Figure 6n

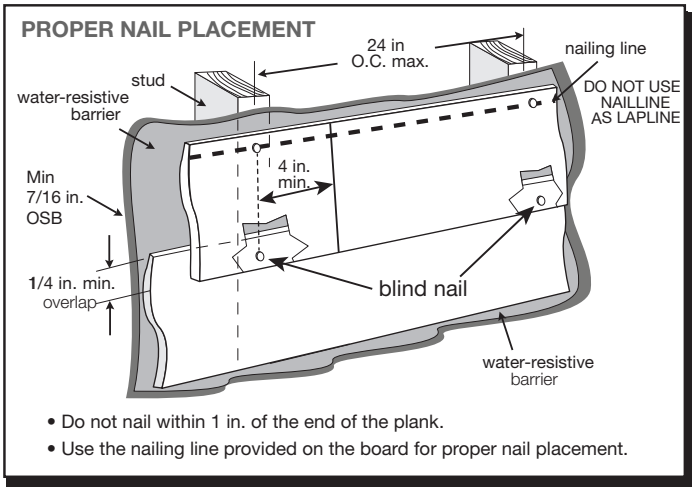

Figure 6o

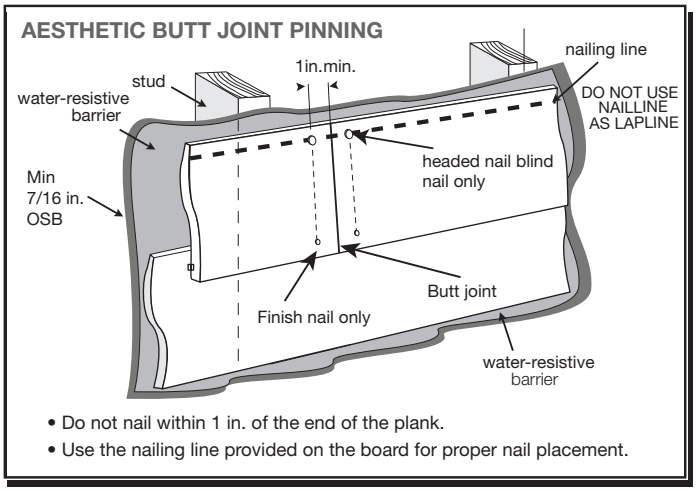

Figure 6p

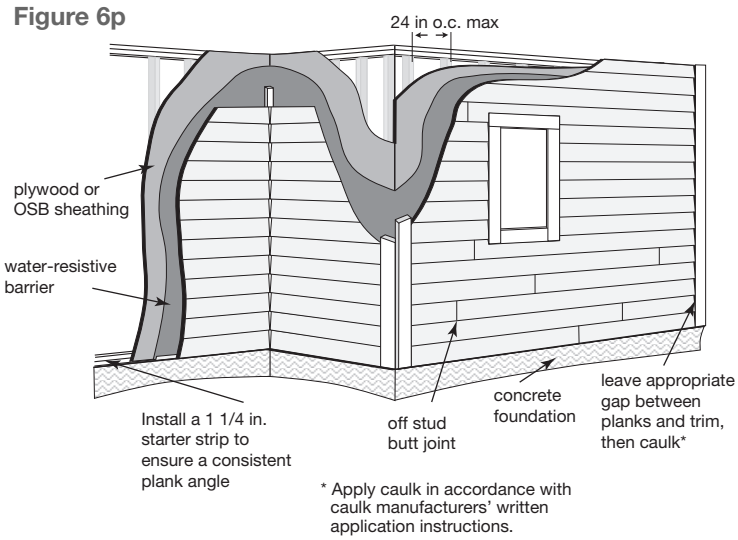

* Apply caulk in accordance with caulk manufacturers' written application instructions.

7. MITERED CORNERS

This section illustrates one method for cutting and installing mitered corners with a minimum number of saw adjustments. There may be additional techniques/steps not presented here that are also suitable for creating mitered corners.

Before proceeding, ensure that any necessary water management controls are specified and incorporated into the corner detail by an appropriate professional. James Hardie does not warrant product installation or wall damage due to water infiltration.

Wall Preparation

- Ensure corners are level and plumb
- As a best practice for water management, install a corner flashing extending 3"- 6" from each direction over a water resistive barrier (Fig. 7a)
- For Hardie® Artisan lap only install a 1 1/4 in. starter strip such that the ends stop at the corner of the wall. Do not overlap the ends (Fig. 7b)

Figure 7a. Metal corner flashing applied to external corner

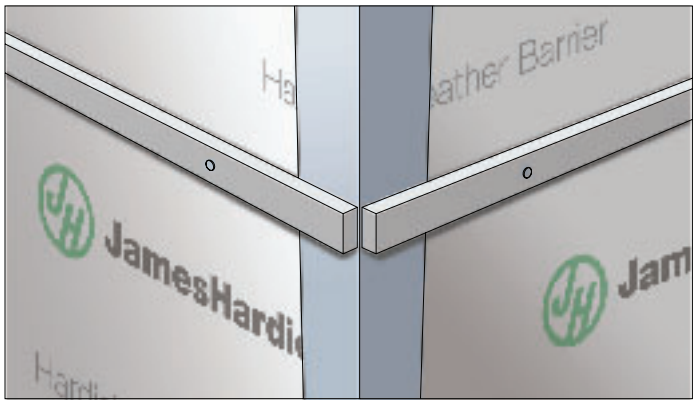

Figure 7b. Starter strip

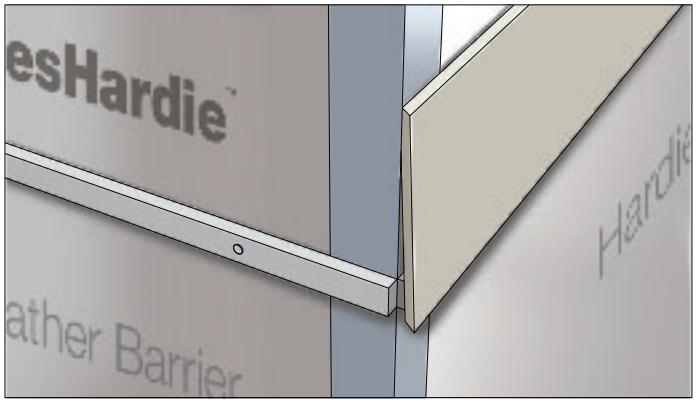

Figure 7c. Applying the first Hardie® Artisan lap siding

CUTTING PREPARATION

- A compound miter saw (Fig. 7d) will be needed to cut mitered corners on Hardie® Artisan lap siding
- Use a Hardie™ Blade saw blade for cutting fiber cement products. Refer to Cutting Instructions on Page 1 for cutting dust safety guidelines.
- Set saw blade - left tilt to 45° (Fig. 7e)

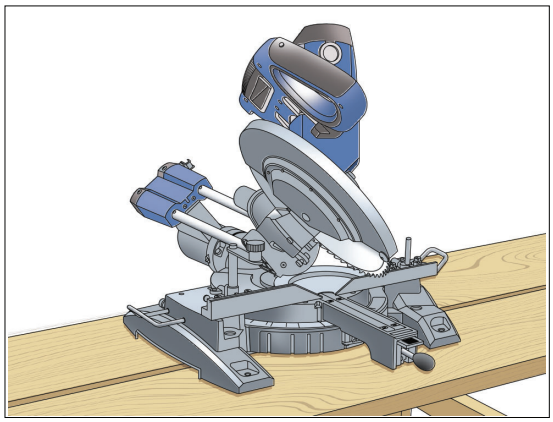

Figure 7d. Compound miter saw.

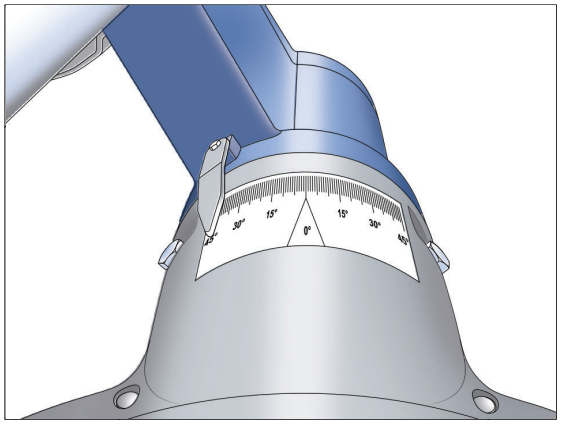

Figure 7e. Set the saw blade angle to 45°.

Note: Saw settings may have to be adjusted to obtain the desired miter cut aesthetics on walls that are not plumb, level or out of square.

HARDIE® ARTISAN LAP SIDING MITER CUTTING

Saw Setup

- Set saw blade - left tilt to 45° (Figure 7e)
- Set saw base left of zero:

  10° for 5-¼" Hardie® Artisan lap

  8° for 7- ¼" Hardie® Artisan lap

  7° for 8- ¼" Hardie® Artisan lap

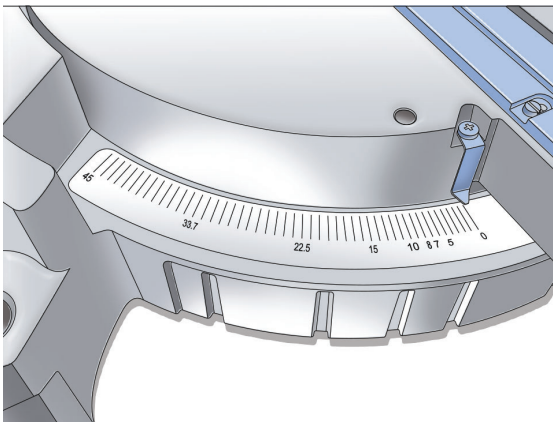

Figure 7f. Set the saw base to the required setting based on plank width, as described above.

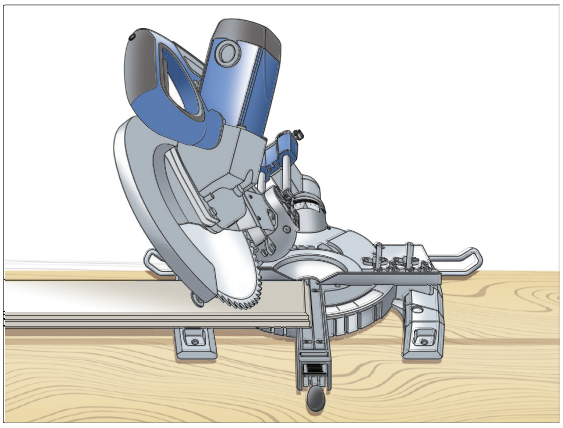

Figure 7g. Outside corner left-hand miter cut: Feed board face down with top edge away from fence. See below for cutting other orientations.

OUTSIDE CORNERS

Left - hand miter:

• Feed from the left. Place the board face down with top edge away from saw fence (Figure 7g).

Right - hand miter:

• Feed from the right. Place the board face up with the top edge against saw fence.

INSIDE CORNERS

Left - handed miter:

• Feed from the left. Place the board face up with top edge away from the saw fence.

Right - handed miter:

• Feed from the right. Place the board face down with the top edge closest to the saw fence.

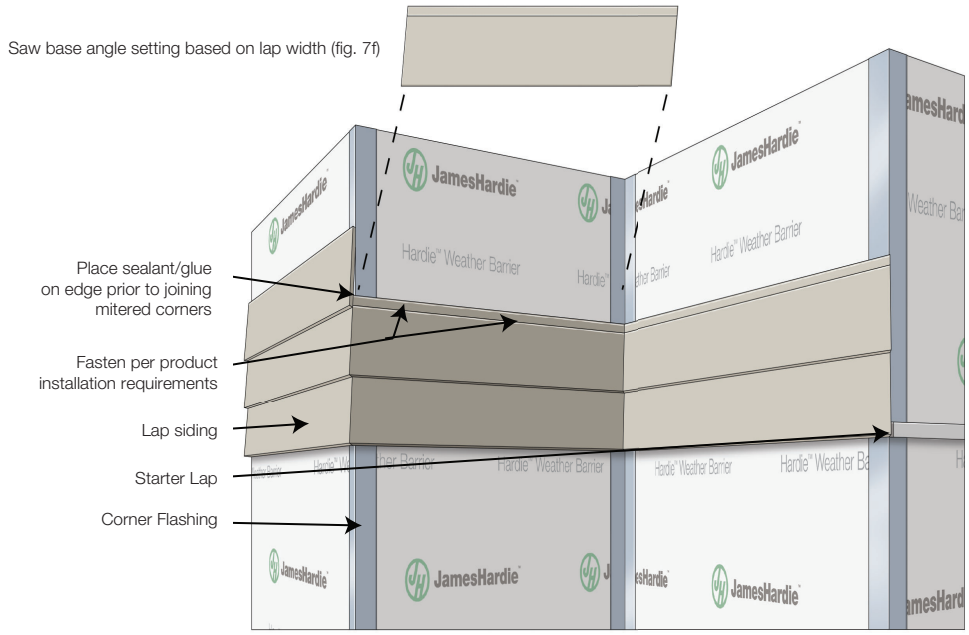

Figure 7h.
Hardie® Artisan lap siding installation with mitered internal and external corners.

FINISHING

• Fill mitered joint with joint sealant/glue to fill the each joint. Wipe any away any excess sealant or glue.
• Finish nails placed minimum 1” from bottom and minimum 3/4” from miter edge can be used if needed to pull mitered corners together.
• De-burr and shape edges as necessary.
• Paint per product installation requirements.

ALTERNATIVE TO MITER CUTS

• Commercially available aluminum corner caps can be used instead of a miter cut corner. The cap covers the gap formed by square cut planks at the corner, and provides a similiar appearance to a true miter cut corner.

8. FINISHING

CAULKING

For best results, use an Elastomeric Joint Sealant complying with ASTM C920 Grade NS, Class 25 or higher or a Latex Joint Sealant complying with ASTM C834. Caulking/Sealant must be applied in accordance with the caulking/sealant manufacturer's written instructions. Note: Some caulking manufacturers do not allow tooling.

PAINTING

DO NOT use stain or oil/alkyd base paints on Hardie® products. Factory-primed Hardie® products must be painted within 180 days of installation. 100% acrylic topcoats are recommended. Do not paint when wet. For application rates, refer to paint manufacturer's specifications. Back-rolling is recommended if the paint is sprayed.

CUT EDGE TREATMENT

Caulk, paint or prime all field cut edges. Touch-up kits are required to touch-up ColorPlus® Technology finishes.

CLEANING AND MAINTENANCE

Recommended maintenance includes, but is not limited to:

- Washing down the exterior surfaces every 6 to 12 months with a garden hose or low pressure water spray to remove dirt and debris.*
- Re-applying of exterior finishes.*
- Maintaining the exterior envelope and connections including joints, penetrations, flashings, and sealants (caulking) that may provide a means of moisture entry beyond the exterior cladding.
- Cleaning out gutters, blocked pipes, and overflows as required.
- Pruning back vegetation that is touching the building. Clearance between the siding and shrubs is recommended.
- Ensuring required external ground clearances and drainage slopes are maintained.

* Refer to your paint manufacturer for washing and recoating recommendations.

Low pressure water spray, a soft medium bristle (nonmetal) brush is most suitable for cleaning fiber cement products.

Note: If using a pressure washer, care must be taken to ensure that the water stream does not damage the surface of the siding. Using wide fan tips that are kept a minimum of 6 feet from the wall and at pressures under 1500 psi will minimize the chance of damaging the siding.

IMPORTANT

High pressure water blast and sand blasting may damage the surface of the fiber cement product. Acid washing can damage the fiber cement surface and is not recommended. Damage to siding arising from improper cleaning or maintenance is not covered under applicable Hardie® product warranties.

COVERAGE CHART/ESTIMATING GUIDE

This coverage chart is meant as a guide. Actual usage is subject to variables such as building design. James Hardie does not assume responsibility for over or under ordering of product.

Number of 12 ft planks, Includes 5% waste factor.

Coverage Area Less Openings 1 SQ = (100sq. ft.)	Lap Width Exposure	7 1/4 6	8 1/4 7
1		18	15
2		35	30
3		53	45
4		70	60
5		88	75
6		105	90
7		123	105
8		140	120
9		158	135
10		175	150
11		193	165
12		210	180
13		228	195
14		245	210
15		263	225
16		280	240
17		298	255
18		315	270
19		333	285
20		350	300

Silica Warning. DANGER: May cause cancer if dust from product is inhaled. Causes damage to lungs and respiratory system through prolonged or repeated inhalation of dust from product. Refer to the current product Safety Data Sheet before use. The hazard associated with fiber cement arises from crystalline silica present in the dust generated by activities such as cutting, machining, drilling, routing, sawing, crushing, or otherwise abrading fiber cement, and when cleaning up, disposing of or moving the dust. When doing any of these activities in a manner that generates dust you must (1) comply with the OSHA PEL for silica dust and/or other applicable law, (2) follow James Hardie cutting instructions to reduce or limit the release of dust; (2) warn others in the area to avoid the dust; (4) when using mechanical saw or high speed cutting tools, work outdoors and use dust collection equipment; and (5) if no other dust controls are available, wear a dust mask or respirator that meets NIOSH requirements (e.g. N-95 dust mask). During clean-up, use a well maintained vacuum and filter appropriate for capturing fine (respirable) dust or use wet clean-up methods - never dry sweep.

WARNING: This product can expose you to chemicals including respirable crystalline silica, which is known to the State of California to cause cancer. For more information go to P65Warnings.ca.gov.

RECOGNITION: In accordance with ICC-ES Evaluation Report ESR-2290, Hardie® Artisan lap is recognized as a suitable alternate to that specified in: all code years from the 2006 thru 2021 International Residential Code for One and Two-Family Dwellings, and all code years from the 2006 thru 2021 International Building Code, Artisan lap is also recognized for application in the following: State of Florida listing FL#10477, Texas Department of Insurance Product Evaluation EC-55. These documents should also be consulted for additional information concerning the suitability of this product for specific applications.

RECOGNITION: HardieTrim® boards may be installed as an equal alternative to conventional trim permitted for use in; 2006, 2009, 2012 & 2015 International Building Code, Section 1403.1, and the 2006, 2009, 2012 & 2015 International Residence Code for One - and Two - Family - Dwellings, Section R703.1.

© 2023 James Hardie Building Products, Inc. All rights reserved TM, SM and ® denote trademarks or registered trademarks of James Hardie Technology Limited.

Product Warranties and Additional Installation and Safety Information are available at jameshardiepros.com